ITEM NO.	PART NUMBER	DESCRIPTION	QTY.	COMPONENT NOTES
1	50-01004	Connector, 5 pin M8 B-code socket, 8x15.2 mm, gold plated, molding style, solder cup, IP67	1	
2	30-02980	Wire, 5C TS, 24 AWG, UL20387, 300V, 105C, 60C oil, UV, 5.6 mm, VW-1, PVC, 80A, black	1	
3	24-00400	Overmold, M8 plug and jack, 180°	1	PVC, black

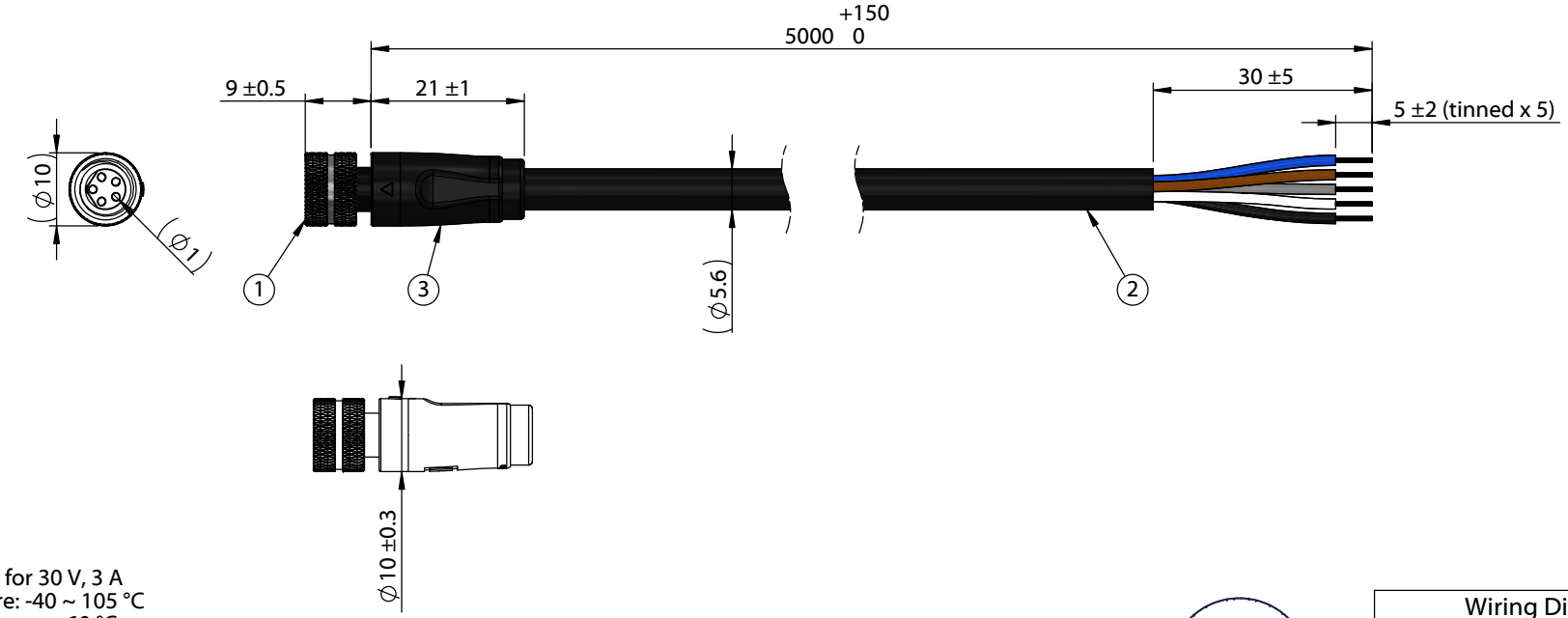

Notes:
Cable rated for 30 V, 3 A
Temperature: -40 ~ 105 °C
Oil resistant up to 60 °C
Water resistant up to 75 °C
UV resistant

IP67 waterproof rating when mated with corresponding (IP67) connector

Functionally equivalent components may be substituted

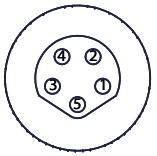

Front View
Not to Scale

Wiring Diagram	
50-01004	wire color
1	brown
2	white
3	blue
4	black
5	gray

Revision:	Date:	Description:
A	3/13/2023	Initial release

Prepared: PB — Digitally signed by PB Date: 2023.04.13 11:41:07 -07'00'

Verified: MP — Digitally signed by MP Date: 2023.04.20 10:52:22 -07'00'

Dimensions are in millimeters.
Tolerances:
X: ± 0.5 mm
X.X: ± 0.3 mm
X.XX: ± 0.05 mm

Notes:

RoHS compliant

Function test: no open, no short circuit, no intermittent

Description:
Cable, 5000mm, 1.0 mm 5C 50-01004 M8 socket to 5mm tinned, 24 AWG, 30-02980 wire

TENSILITY
tel 1.541.323.3228 800 877.670.7118
fax 1.541.323.4202 web tensility.com

Size: A
Part number: 10-05352
Scale: 1:1
Sheet 1 of 1

5 4 3 2 1

To see a custom version of this cable assembly, call Tensility at 541-323-3228 or email engineering@tensility.com